

Daylight Fresnel 1.8kW/1.2kW SE

LAMPHEAD CONTENTS

- Lamp Housing without Bulb (purple grey & silver color)
- 4-leaf Rotatable Barndoor with Safety Wire
- Ø175mm (6-7/8 in.) Fresnel Lens
- Inlet Cable with Multi-Pin Connector
- Stirrup with Ø28mm (1-1/8 in.) Spigot

Requires Electronic Ballast, Lamphead to Ballast Cable and Lamp Bulb

Daylight Fresnel 1.8kW/1.2kW SE

SPECIFICATIONS

Identity No.	L01812DS
Capacity	1,800W / 1,200W
Lamp Bulb Voltage	140V / 100V
Fresnel Lens	Ø175mm (6-7/8 in.)
Lamp Type	CSR 1800/SE/HR or HMI 1800W/SE
	MSR 1200/HR or HMI 1200W/SE
Color Temp.	5600K
Lamp Holder	G38
Stirrup	Ø28mm (1-1/8 in.) Spigot
Class / IP Rating	1 / IP 23
Max. Surface Temp.	180 °C / 170 °C
Min. Distance to Illuminated Object	6m
Min. Distance to Flammable Object	0.5m
Operating Range	+45° ~ 0° ~ -45°
Weight (lamphead)	9.7kg
Weight (with barndoor)	10.7kg

PHOTOMETRIC DATA

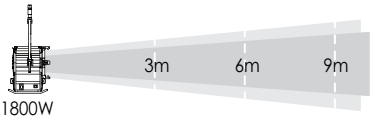

1800W Spot (5°)	3m	6m	9m
Lux	90000	20000	9000
Beam Ø	0.26 m	0.52 m	0.79 m
Flood (52°)			
Lux	12000	3200	1500
Beam Ø	2.93 m	5.85 m	8.78 m

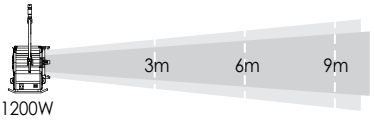

1200W Spot (5°)	3m	6m	9m
Lux	102403	25601	11378
Beam Ø	0.26 m	0.52 m	0.79 m
Flood (52°)			
Lux	7799	1950	867
Beam Ø	2.93 m	5.85 m	8.78 m

ACCESSORIES

- Electronic Ballast V3 : 1.8kW/1.2kW/575W
- Lamphead to Ballast Cable : 7m (23 ft.) or 15m (49 ft.)
- 4-leaf Rotatable Barndoor
- Filter Frame
- Set of 4 Scrims Ø229mm (9 in.) :
  - Full Single, Full Double, Half Single, Half Double
- Scrim Bag
- Safety Cable (for lamphead)
- Safety Wire (for barndoor)

DIMENSIONS (mm)

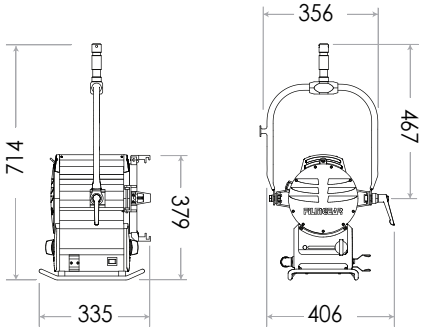

FILM GEAR INT. reserves the right to change or alter any of the items detailed on this page, to increase or improve manufacturing techniques without prior notice. @ 20250113