Daylight Par Faceted F18k FACETED



LAMPHEAD CONTENTS

- Lamp Housing without Bulb (purple grey & silver color)
- 4-leaf Rotatable Barndoor with Safety Wire
- Ø645mm UV Protective Lens
- Inlet Cable with Multi-Pin Connector
- Stirrup with Ø28mm (1-1/8 in.) Spigot

Requires Electronic Ballast, Lamphead to Ballast Cable and Lamp Bulb

Daylight Par Faceted F18k

SPECIFICATIONS

Identity No.	L1800FPS
Capacity	18,000W
Lamp Bulb Voltage	225V
UV Protective Lens	Ø645mm
Lamp Type	HMI 18000W/SE
Color Temp.	5600K
Lamp Holder	GX51
Stirrup	Ø28mm (1-1/8 in.) Spigot
Class / IP Rating	1 / IP 23
Max. Surface Temp.	260 °C
Min. Distance to Illuminated Object	15m
Min. Distance to Flammable Object	2m
Operating Range	+45° ~ 0° ~ -45°
Weight (Lamphead)	66kg
Weight (with barndoor)	72kg

PHOTOMETRIC DATA

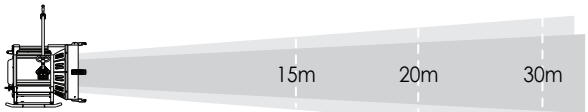

		15m	20m	30m
18kW Spot 15°	Lux	50618	32490	14440
	Beam Ø	3.9 m	5.3 m	7.9 m
Flood 50°	Lux	9476	3365	1495
	Beam Ø	14.0 m	18.7 m	28.0 m

DIMENSIONS (mm)

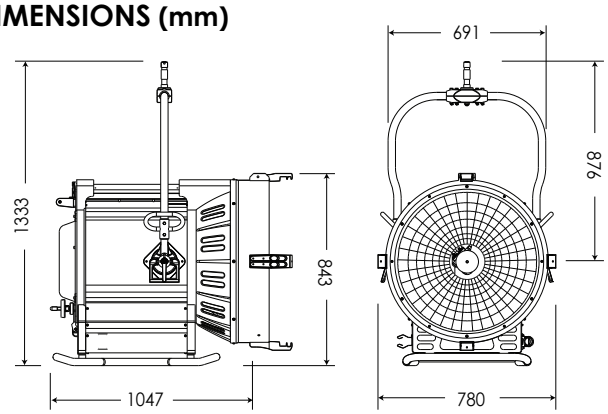

ACCESSORIES

- Electronic Ballast V3 : 18kW/12kW
- Lamphead to Ballast Cable : 15m (49 ft.) or 20m (66 ft.)
- 4-leaf Rotatable Barndoor
- Set of 4 Scrims Ø737mm :
  - Full Single, Full Double, Half Single, Half Double
- Scrim Bag
- Safety Cable (for lamphead)
- Safety Wire (for barndoor)

FILM GEAR INT. reserves the right to change or alter any of the items detailed on this page, to increase or improve manufacturing techniques without prior notice. @ 20250113

Film Gear (International) Ltd. Unit A, 3/F, Seapower Industrial Centre, 177 Hoi Bun Road, Kwun Tong, Kln., Hong Kong (852) 2794 3608 info@filmgear.net
Film Gear USA Group 9528 Rush Street, Suite A South El Monte, CA 91733, U.S.A 1-323-780-8880 joanna@filmgearusa.com
www.filmgear.net